SUNSCAPE
503-610-1651
https://sunscapeled.com

SOLO Light Panels

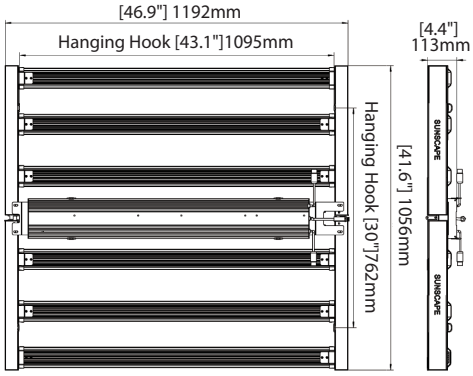

SKU	SOLO Pro PA-1-630-GM-120-6	SOLO Pro Plus PA-1-750-GM-120-6	SOLO Pro Boost PA-1-840-GM-120-6
Power Consumption (initial/holding)	630 Watts /620 Watts	750 Watts /740 Watts	840 Watts /820 Watts
HPS Equivalent (wattage)	1000 Watts	1300 Watts	1500 Watts
Input Voltage	Autosensing 100-277Vac&277-480Vac		
Maximum Environmental Operating Temperature	Normal Upto to 95 Degree F; 12 Hours Upto 130 Degree F		
Typical Current	1.29A (@480V)	1.54A (@480V)	1.73A (@480V)
	1.82A (@347V)	2.15A (@347V)	2.41A (@347V)
	2.27A (@277V)	2.71A (@277V)	3.03A (@277V)
	2.65A (@240V)	3.15A (@240V)	3.52A (@240V)
	3.09A (@208V)	3.64A (@208V)	4.09A (@208V)
	5.37A (@120V)	6.54A (@120V)	7.13A (@120V)
Power Factor	>94%	>94%	>94%
Lumen/watts	159.6	154.6	147.4
PPE(µmol/J)	3.07	2.96	2.91
PPF(µmol/s)	1,852	2,036	2,464
Light Distribution	120°	120°	120°
Dimming	0-10v	0-10v	0-10v
Lifespan	L70>150,000hrs	L70>150,000hrs	L70>150,000hrs
Certifications	UL 8800 Damp Location Rating & IP 66 Full Fixture		
	CSA ETL and CE		
	DLC		
Controlled Environment	Indoor (Non-stacked), Indoor (Stacked), Greenhouse		
Total Number of LEDs	2448X LEDs	2448X LEDs	2448 X LEDs
Luminaire Weight	17.6kg(38.8lbs)	17.6kg(38.8lbs)	17.6kg(38.8lbs)
Power Driver Weight	6.0kg(13.2lbs)	6.0kg(13.2lbs)	6.0kg(13.2lbs)
Dimensions (inches)	46.9"L x 41.6"W x4.4"H	46.9"L x 41.6"W x4.4"H	46.9"L x 41.6"W x4.4"H

Family	Input Voltage	Input Power	Spectrum	Angle Distribution	DC Extension	AC Plug	Mounting
PA	1 100-277V	630 630W	GM	120	05 16ft(5m)	N5 NEMA 5-15P	F Std. frame
	2 277-480V	750 750W			10 32ft(10m)	N6 NEMA 6-15P	C Custom
		840 840W			20 64ft(20m)	L7 NEMA L7-15P	

SOLO Light Panels

Annex 1： Packaging

Luminaire Packaging Weight： 19.7kg（43.4lbs）

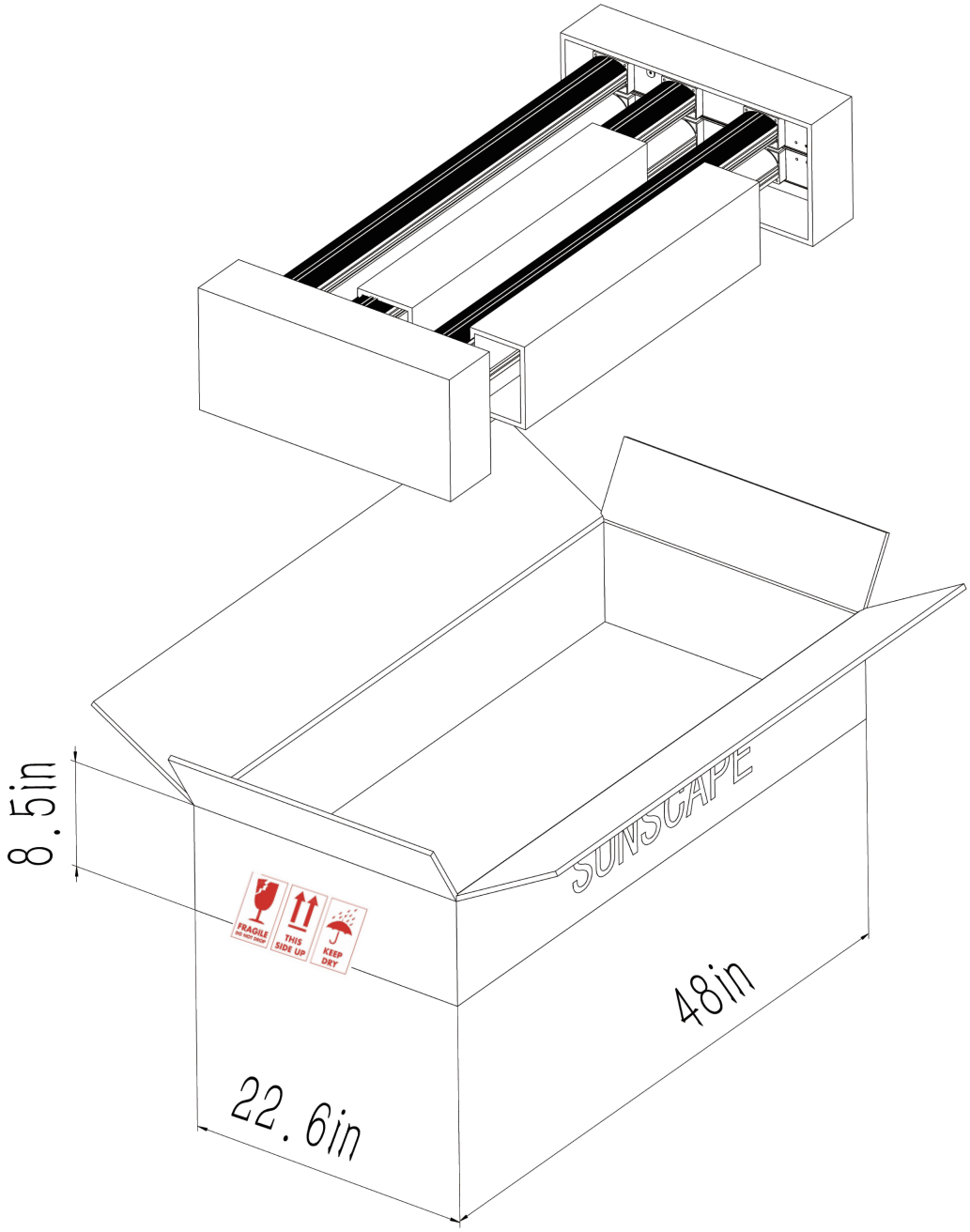

SOLO Light Panels

Annex 2： Packaging

Each Power Driver Packaging Weight： 6.6kg（14.6lbs）

Total Power Driver Packaging Weight： 21.5kg（47.4lbs）

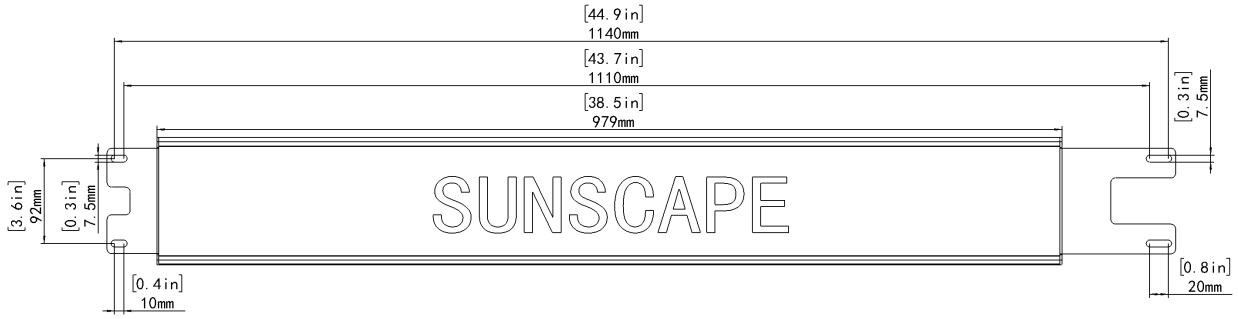

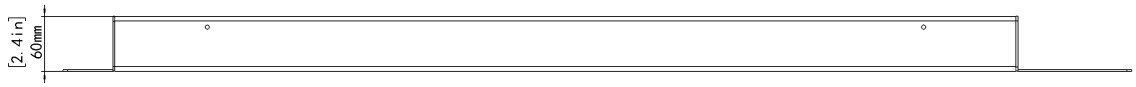

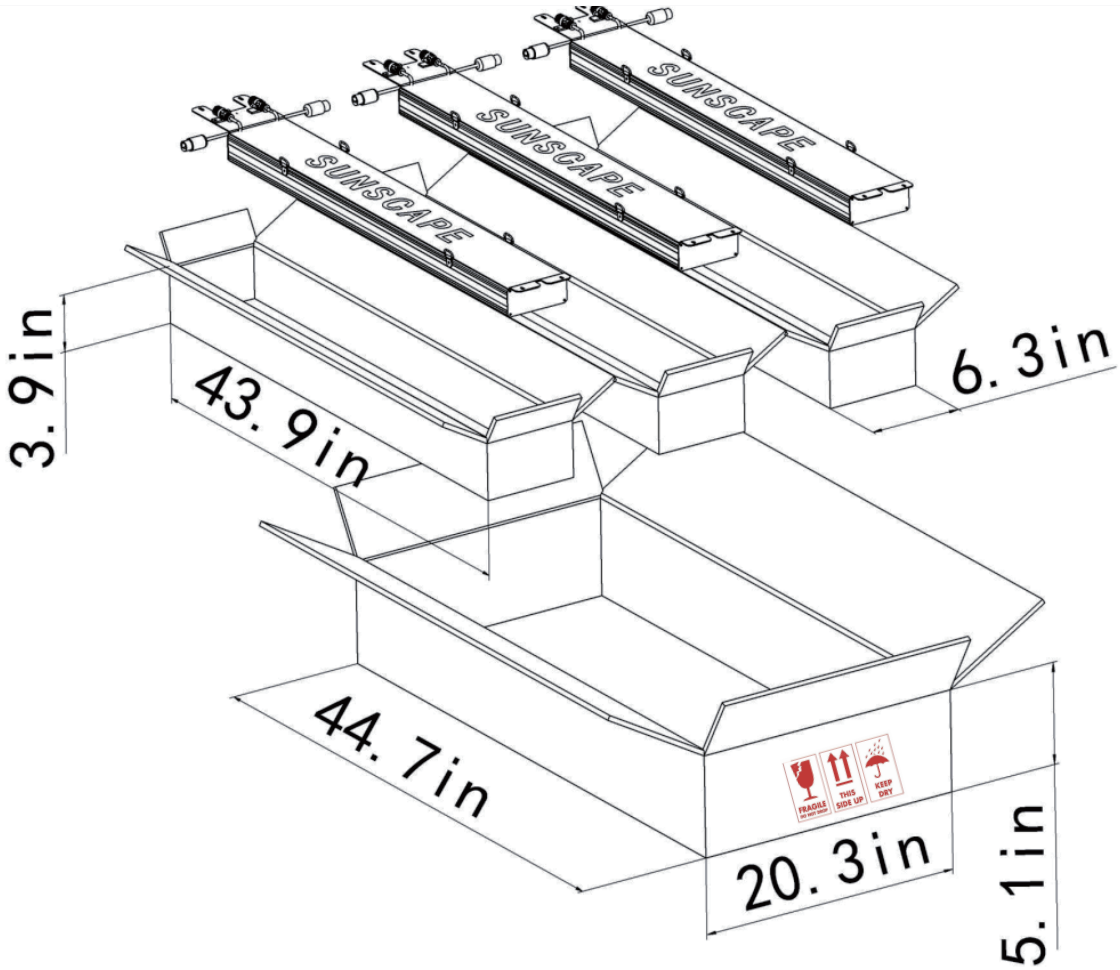

SOLO Light Panels

Lamp accessory package

4:Lamp hook A - 4 pcs

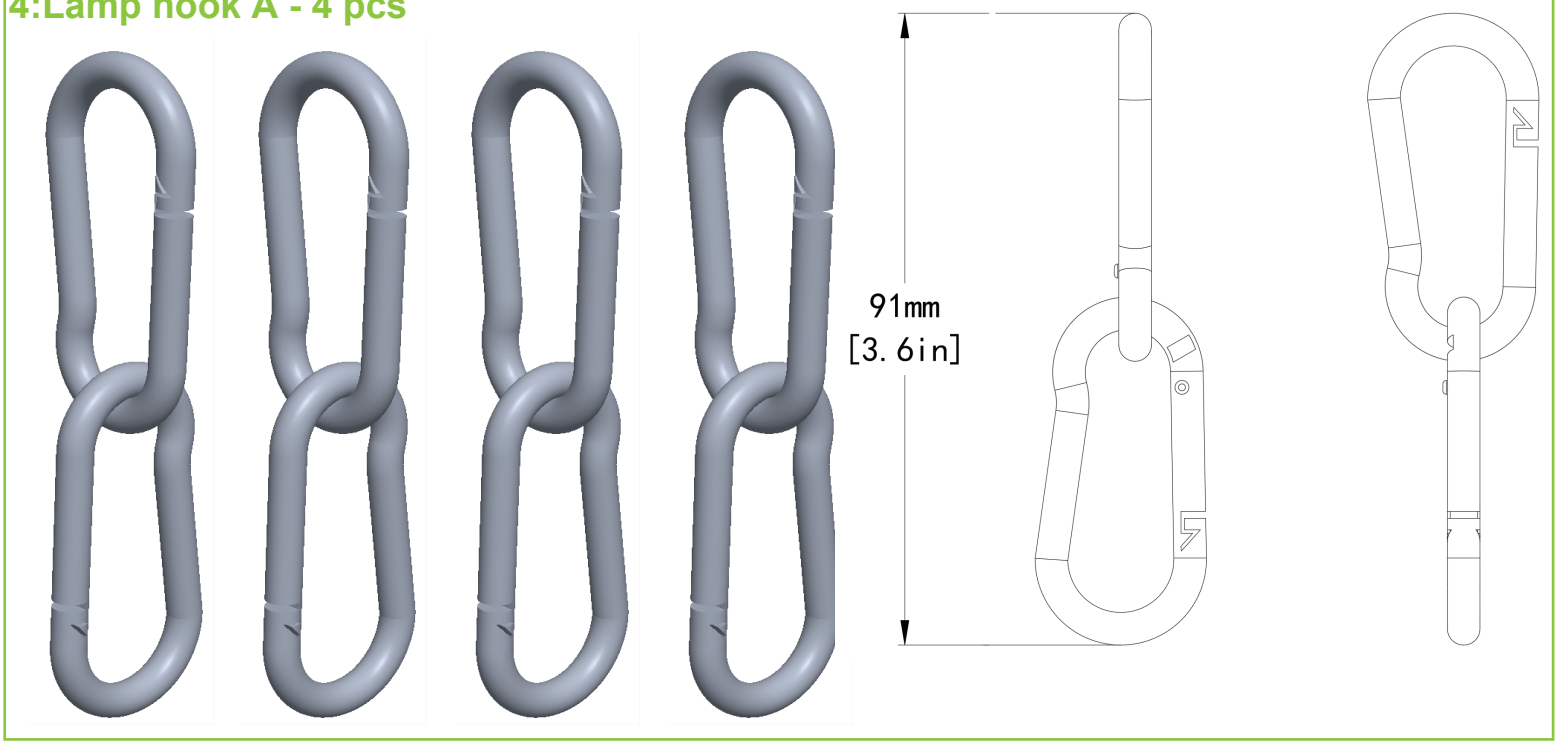

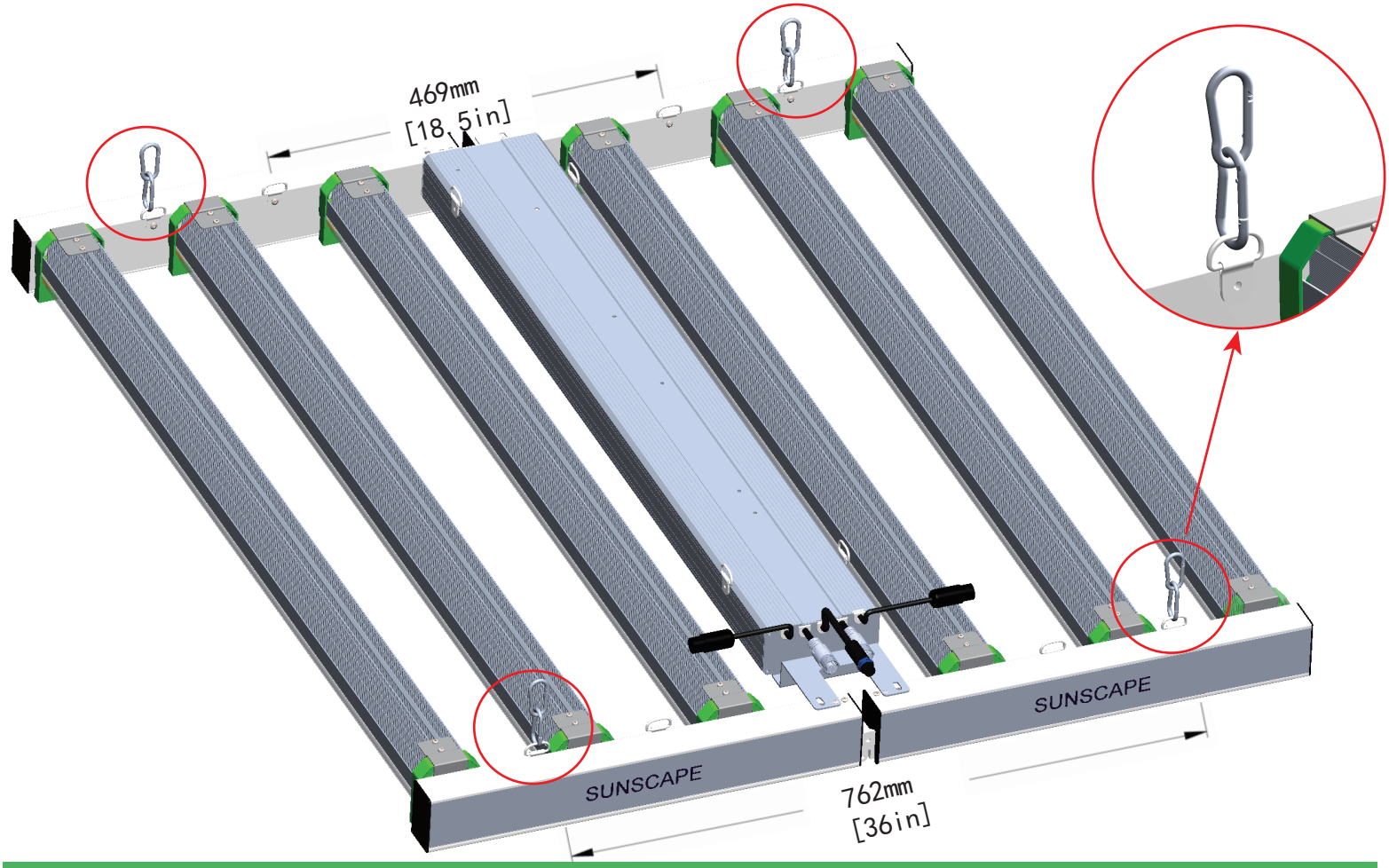

SOLO Light Panels

Lamp accessory package
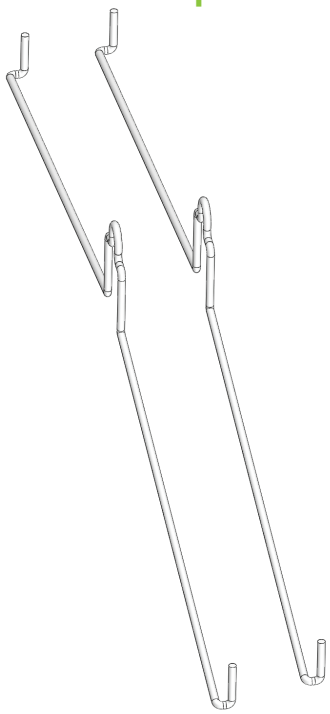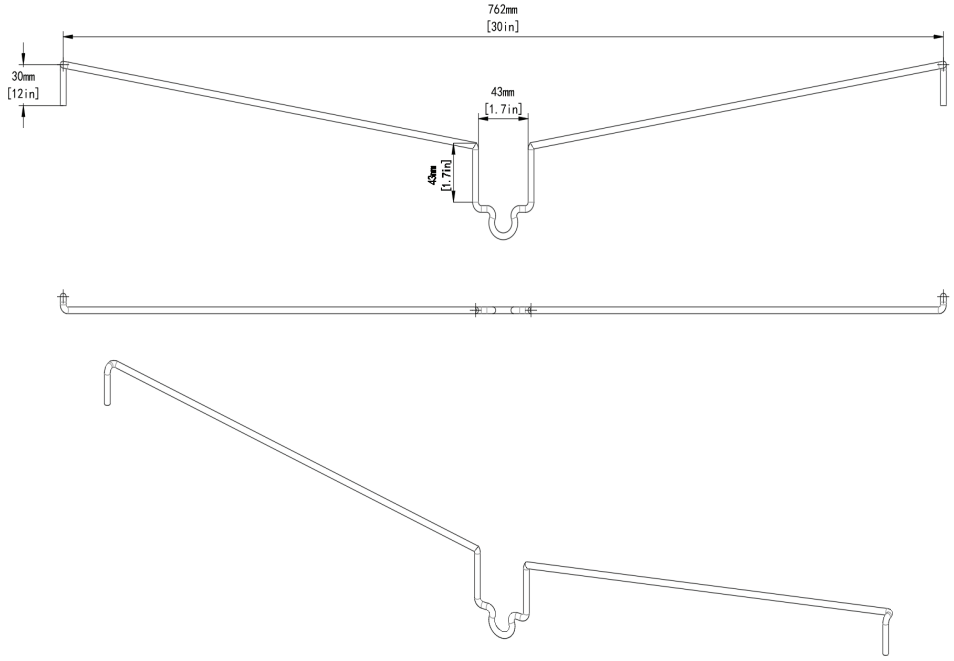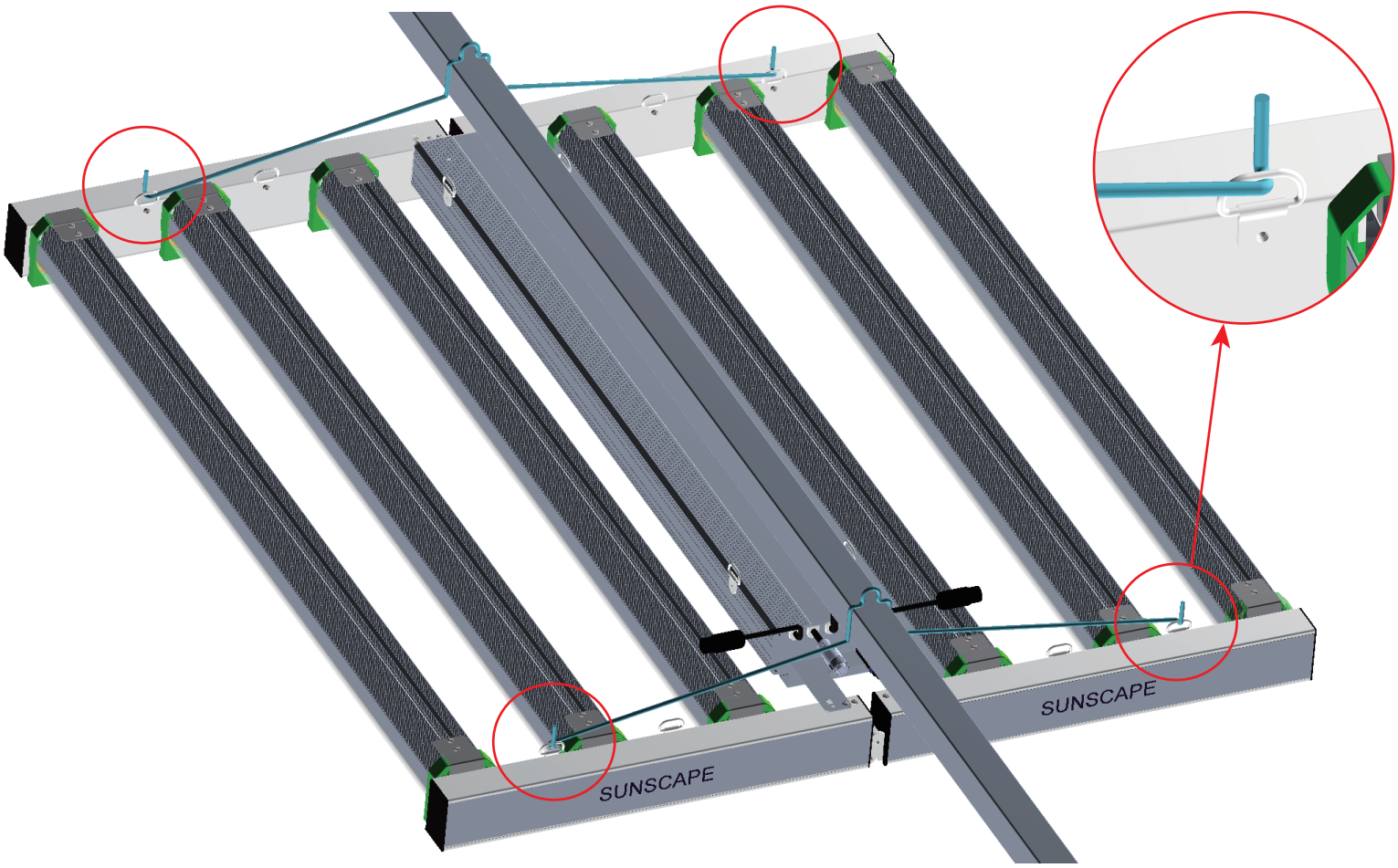
5:Optional Lamp hook B - 2 pcs